DUAL FUEL WIRING YORK HH8 WITH (ADP) RDS KIT TO YORK TL8E or TL9E ULN FURNACE

ADP 24V RDS Field Kit

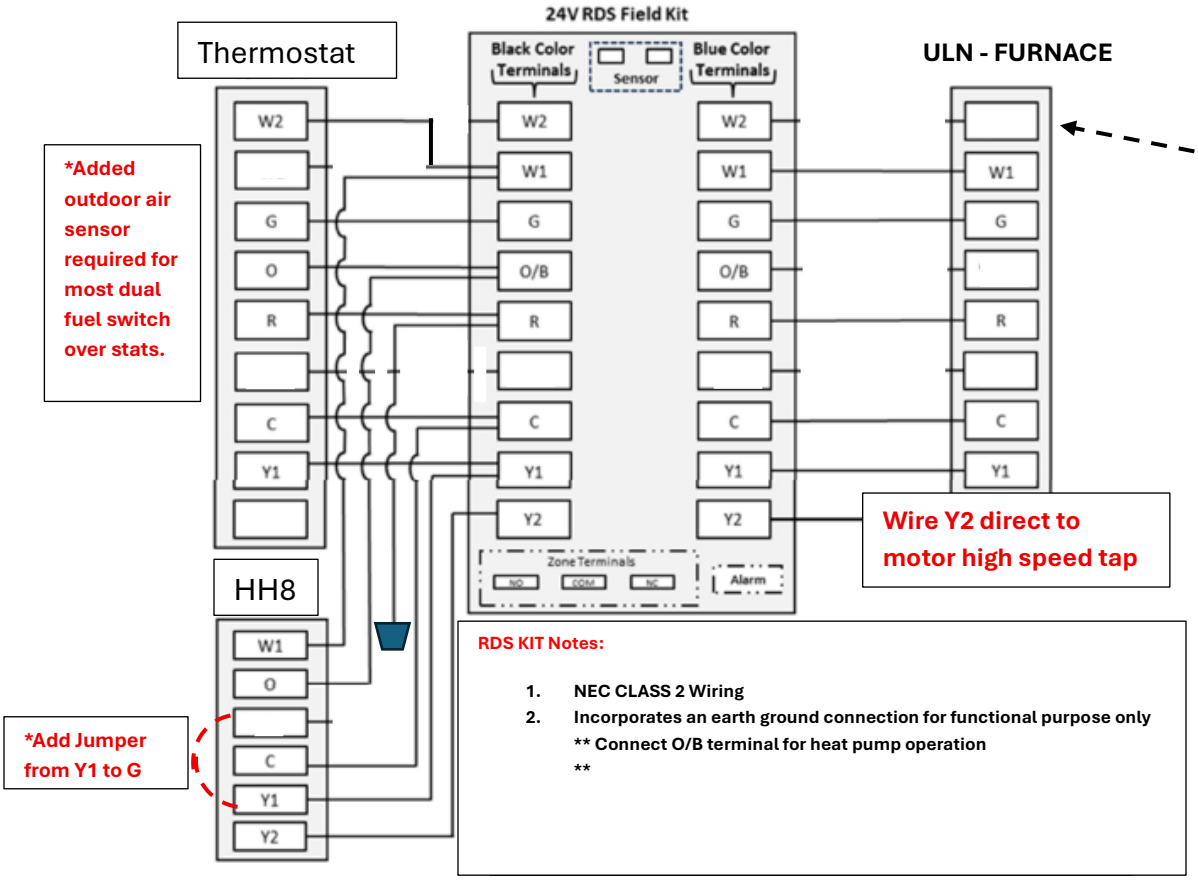

ULN WIRING NOTE:

* W2 Not used on ULN furnace

---

* HH8 Notes: R terminal on the HH8 outdoor terminal strip not used.

*Add Jumper from Y1 to G on outdoor HH8

*Y2 terminal on the outdoor HH8 is an output to energize a higher blower speed when needed by the HH8 logic.

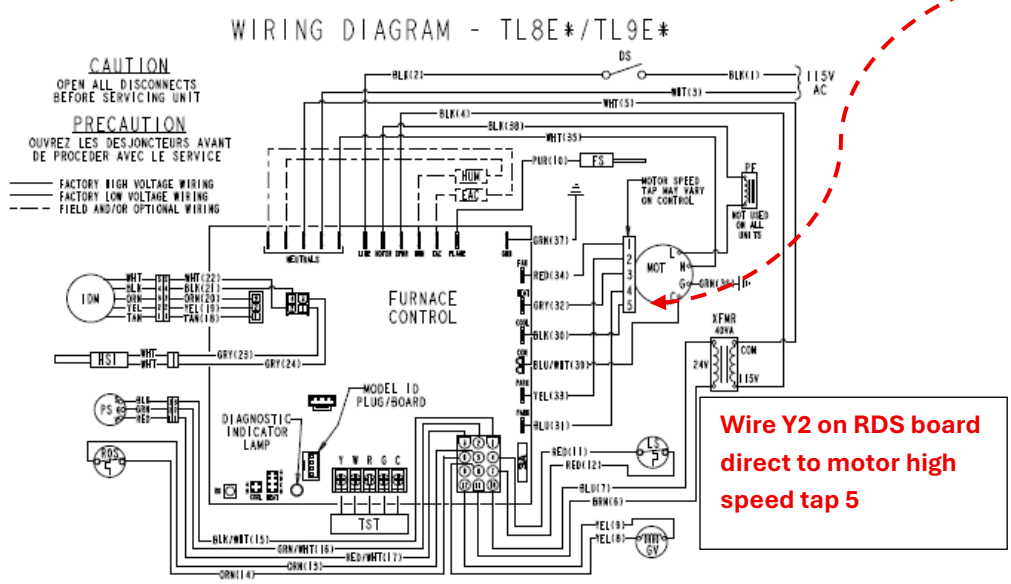

ULN WIRING NOTES:

*There are 5 speeds on the ULN Furnace. 1 is the lowest speed and 5 is the highest speed.

** You can reposition speed wires from ECM motor as required for proper air flow requirements for the HH8 tonnage unit installed. Refer to tech guide or installation manuals for ULN and HH8 for CFM required for your system.